SYC SEMICONDUCTORES Y COMPONENTES

PARANA 274
(C1017AAF) BUENOS AIRES
TEL/FAX: 4371-5300 (L.ROT)
www.sycelectronica.com.ar
info@sycelectronica.com.ar

CODIGO	DESCRIPCION
7005T-XPXC	Conector hembra a 180º top entry X pos. X con.

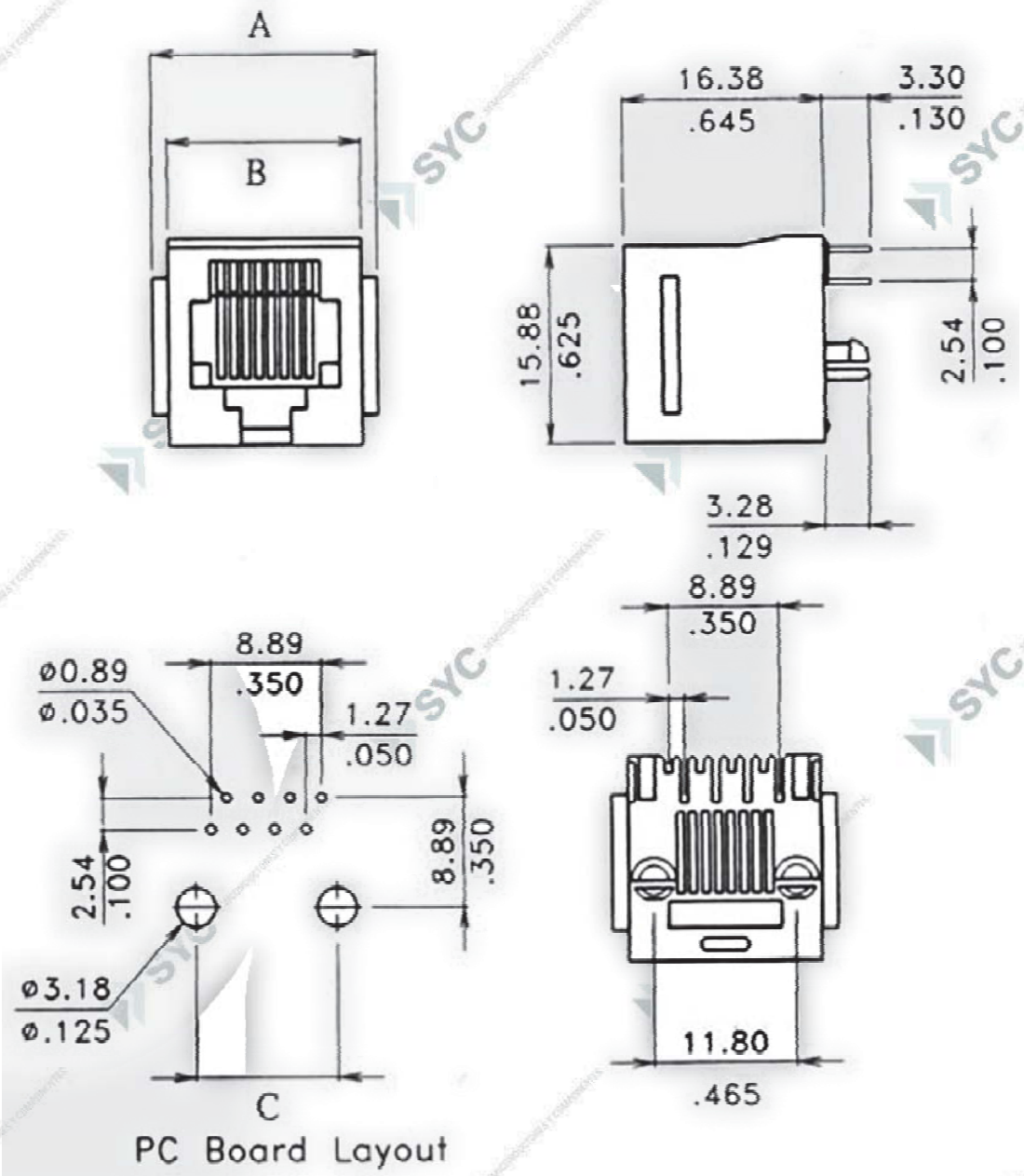

No.of Positions	No.of Contact	Dimensions m/m		
		A	B	C
4P	4	13.97/.550	11.43/.450	3.81/.150
6P	2,4,6	16.00/.630	13.46/530	6.35/.250
8P	8	17.84/.700	15.36/605	8.89/.350